Brake Unit Overview

Outline of Brake Unit

- These units are electric brakes that can stop motor immediately.
- These brake units are divided into the contact (separate) type and contactless (48 mm sq.(1.89 inch sq.)) type.
- Separate type brake units can be used with 3-phase motor.
- The contactless 48 mm sq.(1.89 inch sq.) type brake units can be used with induction motor, reversible motor and electromagnetic brake motor.

Product designation

• Separate type

DZ9 **1** **02**

Voltage **Type**

- SD type
  EX type
- 1: Single-phase 100 VAC
  2: Single-phase 200 VAC
  3: 3-phase 200 VAC
- Separate type brake unit

• Sq.48 mm contactless brake unit

DVMB **48** **1** **L**

Brake unit **Size** **Output** **Voltage**

- 48 mm sq.
  (1.89 inch sq.)
- L : 100 V
  Y : 200 V
- 1: For induction motor
  2: For reversible motor
  3: For electromagnetic brake motor

Brake Unit

Contacting type

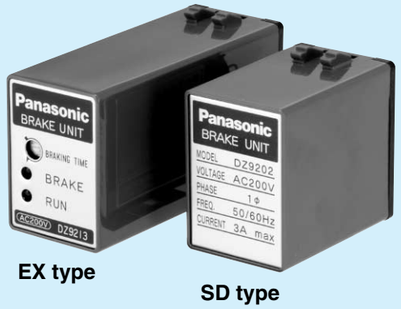

EX type SD type

- These brake units are electric brakes used to instantaneously stop motors.
- These electric brakes have longer life expectancy and can perform inching operation.

• Features

<SD type>

1. Compact 8P plug-in configuration.
2. Can be used in combination with other commercially available SSR (contactless relay).
   These combinations enable the use of electrical signals for “run” and “quick stop” control of motors.
3. The electric brake operates for approx. 0.5 sec.

<EX type>

1. Can be controlled using electrical signal.
   Electrical signal can be used for “run”, “quick stop” and “coast to stop” control of motors.
2. Operation time of the electric brake is adjustable.
   Operation time is set to a suitable value within the range from 0.1 to 2 sec
3. “Run” and “Instantaneous stop” lamps are provided.

• Names and functions

• Braking time control

Adjusts the time up to 2 sec (standard). Since longer braking current increases motor temperature, the shortest time necessary to stop the motor is the recommended setting.

• Brake lamp

Lights in red while the braking current is flowing.

• Run lamp

Lights in green while the motor is running.

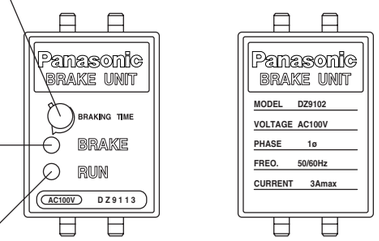

EX type SD type

* Please read your User's manual carefully so that you will understand the operation and safety precautions before attempting to operate the system.

Brake Unit — Contacting type

• Models and applicable motors

		SD type			EX type	
	Rated voltage	DZ9102	DZ9202	DZ9302	DZ9113	DZ9213
Induction motor Reversible motor	Single-phase 100 V	○	------	------	○	------
	Single-phase 200 V	------	○	------	------	○
3-phase motor	3-phase 200 V	------	------	○	------	------

• Specification

<SD type>

Item \ Part No.	DZ9102	DZ9202	DZ9302
Rated voltage	Single-phase 100 VAC	Single-phase 200 VAC	3-phase 200 VAC
Power frequency	50/60 Hz		
Permissible current	Operation current 3 A		
Applicable motor	3 to 90 W		
Braking method	Feeds electric braking current for a specified time		
Electric braking time	0.5 sec (typ)		
Operating temperature	–10 to 50˚C		
Storage temperature	–10 to 60˚C		

<EX type>

Item \ Part No.	DZ9113	DZ9213
Rated voltage	Single-phase 100 VAC	Single-phase 200 VAC
Power frequency	50/60 Hz	
Permissible current	Operation current 3 A	
Applicable motor	3 to 90 W	
Braking method	Feeds electric braking current for a specified time	
Electric braking time	Variable up to 2 sec (typ)	
Operating temperature	–10 to 50˚C	
Storage temperature	–10 to 60˚C	

[Notes]
1. Electric braking system has no holding torque.
2. For application requiring holding force, use Panasonic electromagnetic brake motor.
3. When braking a load with excessively large inertia, related issues are strength and life of motor shaft and gear. For these subjects, consult us.
4. When using motor other than compact geared motor, consult us.

• Outline drawing

SD type

Unit: mm (inch)

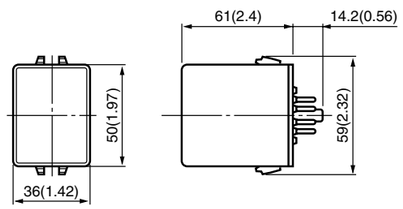

EX type

Unit: mm (inch)

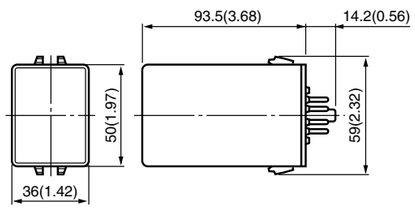

Accessories

Unit: mm (inch)

• Socket (common to SD and EX)

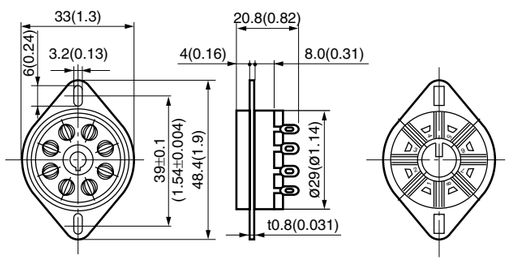

• External resistor for braking (for DZ9302 only)

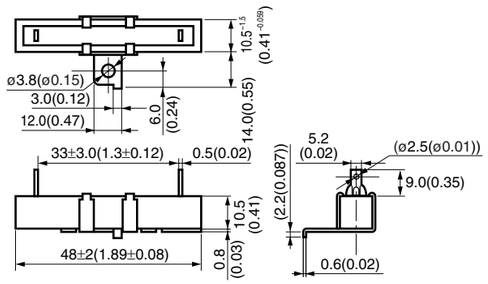

* Please read your User's manual carefully so that you will understand the operation and safety precautions before attempting to operate the system.

Brake Unit — Contacting SD type

The thick continuous lines in the circuit diagram below represent main circuit. Use conductor of approx. 0.75 mm². The thin continuous lines represent signal circuit. Use conductor of size approx. 0.3 mm².

• DZ9102 and DZ9202 fundamental electrical wiring diagram (induction motor)

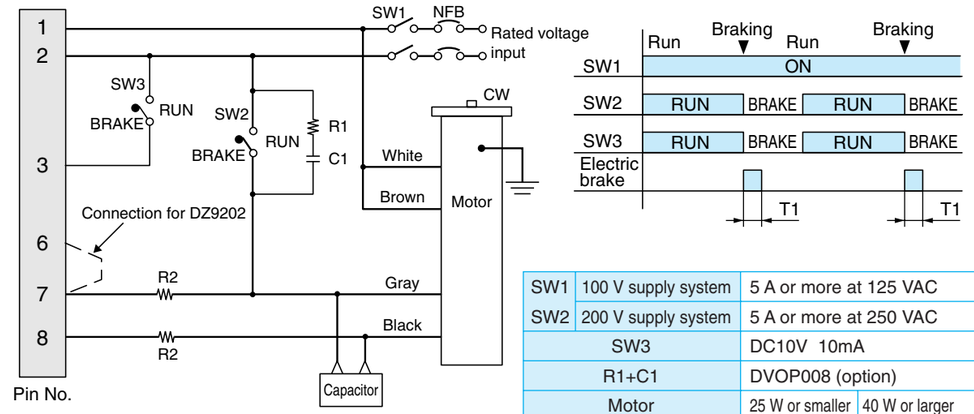

SW1	100 V supply system	5 A or more at 125 VAC	
SW2	200 V supply system	5 A or more at 250 VAC	
SW3		DC10V 10mA	
R1+C1		DVOP008 (option)	
Motor		25 W or smaller	40 W or larger
R2	100 V supply system	0 Ω	30 Ω (approx. 100 W)
	200 V supply system	0 Ω	100 Ω (approx. 100 W)

• When wired as shown above, the motor turns clockwise when viewed from the shaft end. To turn it counterclockwise, exchange brown and gray leads.

[Notes]
1. When SW2 and SW3 are switched from RUN to BRAKE, electric brake is applied for approx. 0.5 sec (T1) causing the motor to stop quickly.
2. Both SW2 and SW3 should be switched from RUN to BRAKE at the same time.
3. The wattage of R2 depends on frequency of start and stop operations. First check the power dissipation.

Control signal

• When using power relay

RY3	HC relay (Matsushita Electric Works), or equivalent

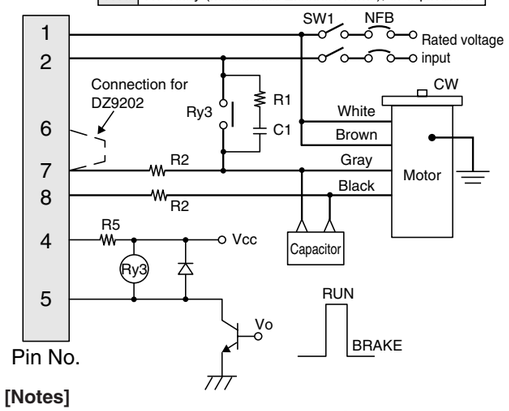

• When using contactless relay (SSR)

SSR	AQ2017 (Matsushita Electric Works), or equivalent

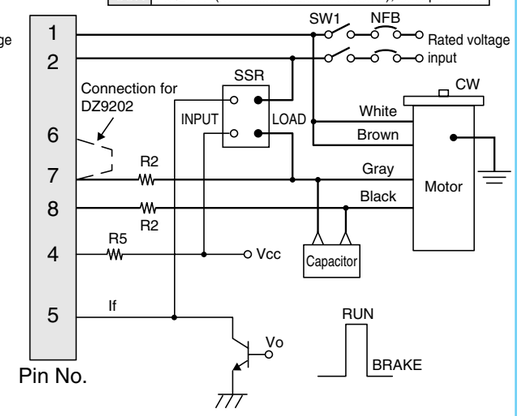

[Notes]
1. Use 0 W R5 when Vcc is below 6 VDC.
   When Vcc is 6 VDC or higher, determine the value of R5 according to the equation shown below.
   Ripple of Vcc should be 5% or below. (Internal resistance 220 W)
   - Resistance of R5 $R5 = \frac{Vcc - 6\ V}{If}$ at If = 15 to 20 mA
   - Example Vcc = 24 V If = 20 mA
     $R5 = \frac{24 - 6}{20 \times 10^{-3}} = 900\ \Omega \fallingdotseq 1\ k\Omega$

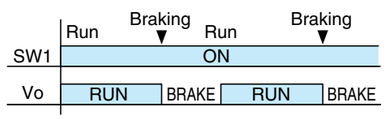

2. Also refer to SSR handling precaution (see contactless relay catalog).

* Please read your User's manual carefully so that you will understand the operation and safety precautions before attempting to operate the system.

The thick continuous lines in the circuit diagram below represent main circuit. Use conductor of approx. 0.75 mm².
The thin continuous lines represent signal circuit. Use conductor of size approx. 0.3 mm².

• DZ9102 and DZ9202 standard electrical diagram (reversible motor)

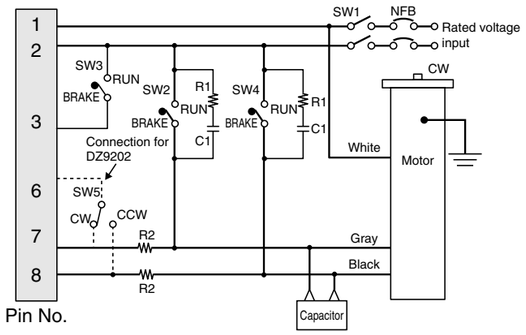

Rotating direction viewed from shaft end	
CW	Clockwise
CCW	Counterclockwise

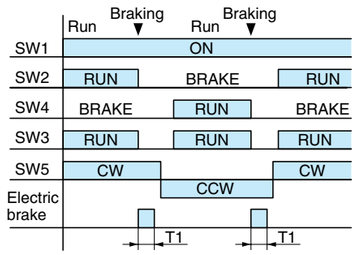

[Notes]
1. When SW2 (SW4) and SW3 are switched from RUN to BRAKE, electric brake is applied for approx. 0.5 sec (T1) causing the motor to stop quickly.
2. Never place both SW2 and SW4 in RUN position at the same time.
3. Never select RUN while electric brake is applied (T1).
4. When using DZ9202, do not operate SW5 while the electric brake is being applied (T1).
5. The wattage of R2 should be determined based on frequency of start and stop operations. First check the power dissipation.

SW1, SW2	100 V supply system	5 A or more at 125 VAC	
SW4, SW5	200 V supply system	5 A or more at 250 VAC	
SW3		DC10 V 10 mA	
R1+C1		DV0P008 (option)	
Motor		25 W or smaller	40 W or larger
R2	100 V supply system	0 Ω	30 Ω (approx. 100 W)
	200 V supply system	0 Ω	100 Ω (approx. 100 W)

Control signal

• When using power relay

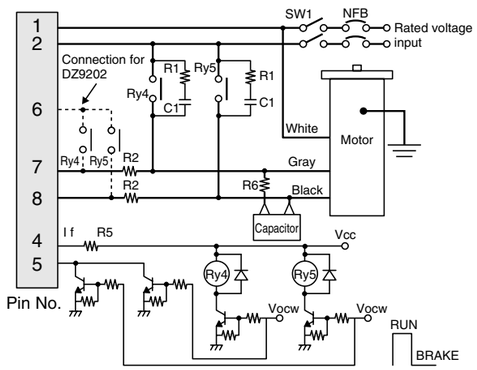

• When using contactless relay (SSR) (Cannot be used for DZ9202)

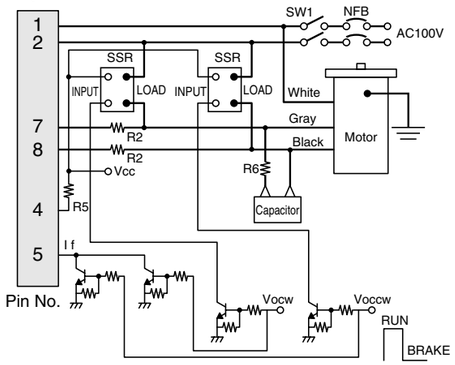

[Notes]
1. Use 0 W R5 when Vcc is below 6 VDC.
   When Vcc is 6 VDC or higher, determine the value of R5 according to the equation shown in description for induction motor.
   Ripple of Vcc should be 5% or below. (Internal resistance 220 W)
2. Ry4 and Ry5 should be relay or electromagnetic contactor with the rated voltage two or more times the power supply voltage and the rated current 3 A or more.
3. Do not place Vocw and Voccw in RUN at the same time.
4. Be sure to use resistor R6 to protect relay, SSR and capacitor. Current will flow through R6 - 2 A 90 W; 1.7 A 60 W; 1 A 40 W; 0.6 A 25 W; 0.4 A 15 W.
5. Also refer to SSR handling precaution (see contactless relay catalog).

SSR	AQP107 (Matsushita Electric Works), or equivalent
R6	10 Ω

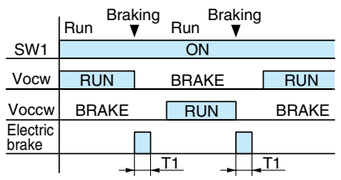

* Please read your User's manual carefully so that you will understand the operation and safety precautions before attempting to operate the system.

The thick continuous lines in the circuit diagram below represent main circuit. Use conductor of approx. 0.75 mm².
The thin continuous lines represent signal circuit. Use conductor of size approx. 0.3 mm².

• DZ9302 fundamental electrical wiring diagram (3-phase motor)

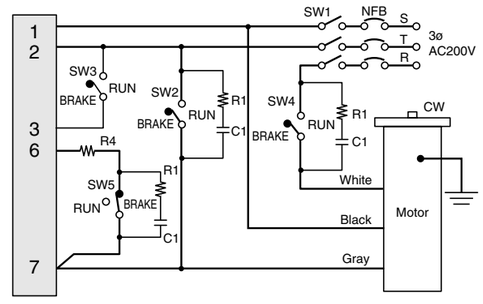

SW1, SW2 SW4, SW5	AC250 V 10 A min.
SW3	DC10 V 10 mA
R1+C1	DV0P008 (option)
R4	Accessory

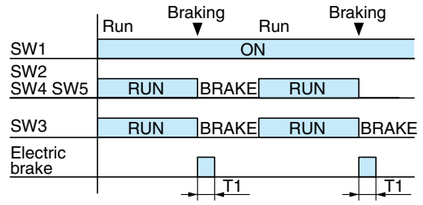

[Notes]
1. When SW2, SW3 and SW4 are switched from RUN to BRAKE, electric brake is applied for approx. 0.5 sec (T1) causing the motor to stop quickly.
2. Do not place these switches to RUN position while the electric braking is applied (T1).
3. A massive amount of current will flow through SW2, SW4 and SW5. Use a disconnecting device (switch or relay) rated at 10 A or more. When using a relay, use HP/HG (Matsushita Electric Works, Ltd.) or equivalent.

• For application using inching motion frequently
If SW2 and SW5 emit long sparks, use of the following circuit is recommended.

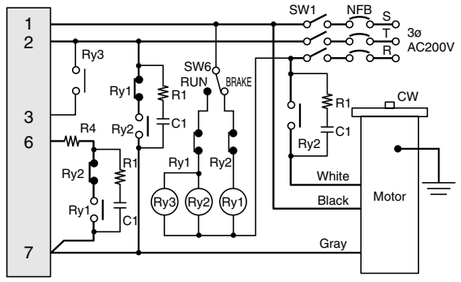

SW1, SW6	AC250 V 10 A min.
RY1, RY2	Relay HP/HG (Matsushita Electric Works, Ltd.) or equivalent
R1+C1	DV0P008 (option)
R4	Accessory
RY3	Twin contact or Au-clad contact relay

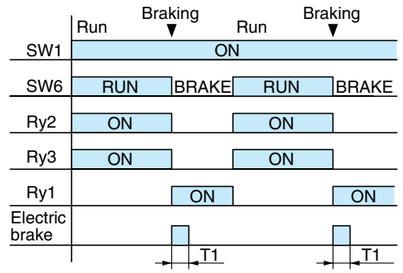

[Notes]
Ry1 and Ry2 should be interlocked to avoid simultaneous "ON".

Control signal

• When using power relay

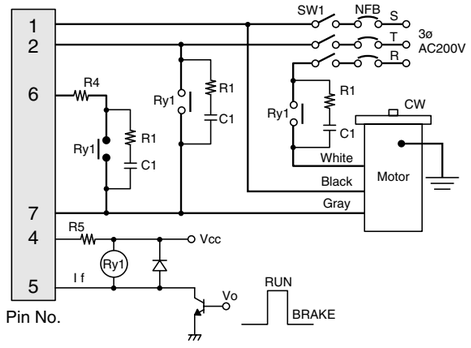

RY1	Relay HP/HG (Matsushita Electric Works, Ltd.) or equivalent

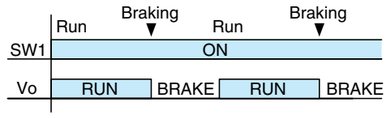

[Notes]
1. Use 0 W R5 when Vcc is below 6 VDC.
   When Vcc is 6 VDC or higher, determine the value of R5 according to the equation shown below.
   Ripple of Vcc should be 5% or below.
   (Internal resistance 220 W)

• Resistance of R5 $R5 = \frac{Vcc - 6\ V}{If}$ at If = 15 to 20 mA

• Example Vcc = 24 V If = 20 mA

$$R5 = \frac{24 - 6}{20 \times 10^{-3}} = 900\ \Omega \fallingdotseq 1\ k\Omega$$

* Please read your User's manual carefully so that you will understand the operation and safety precautions before attempting to operate the system.

The thick continuous lines in the circuit diagram below represent main circuit. Use conductor of approx. 0.75 mm².
The thin continuous lines represent signal circuit. Use conductor of size approx. 0.3 mm².

• DZ9113/DZ9213 fundamental electrical wiring diagram (unidirectional rotation and braking)

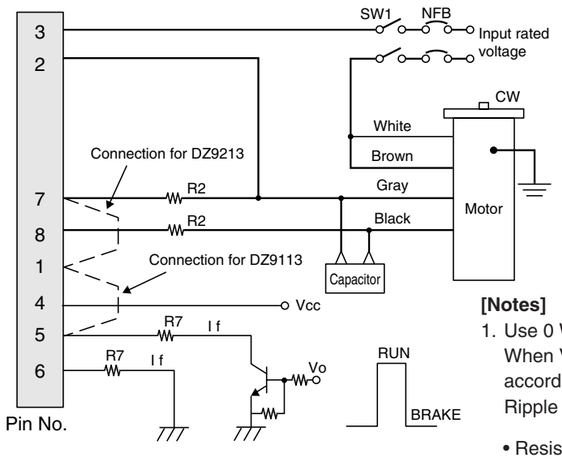

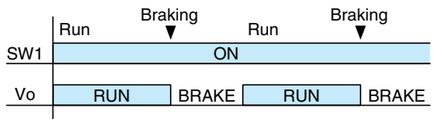

• When wired as shown left, the motor turns clockwise when viewed from the shaft end. To turn it counterclockwise, exchange brown and gray leads.

SW1	100 V supply system	5 A or more at 125 VAC	
	200 V supply system	5 A or more at 250 VAC	
Motor		25 W or smaller	40 W or larger
R2	100 V supply system	0 Ω	30 Ω (approx. 100 W)
	200 V supply system	0 Ω	100 Ω (approx. 100 W)

[Notes]

1. Use 0 W R5 when Vcc is below 6 VDC.
   When Vcc is 6 VDC or higher, determine the value of R5 according to the equation shown below.
   Ripple of Vcc should be 5% or below. (Internal resistance 90 W)
   • Resistance of R7 $R7 = \frac{Vcc(MIN) - 6\ V}{If}$ at If = 32 to 45 mA
   • Example: Vcc (MIN) = 12 V If = 40 mA
   $R7 = \frac{12 - 6}{40 \times 10^{-3}} = 150\ \Omega$
2. The wattage of R2 depends on frequency of start and stop operations. First check the power dissipation.

• DZ9113 application wiring diagram (normal/reverse rotation and braking)

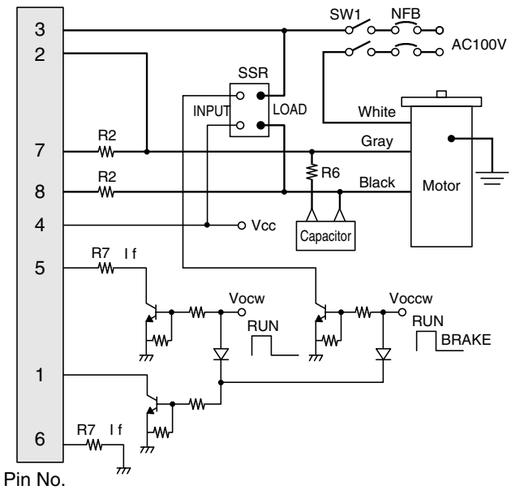

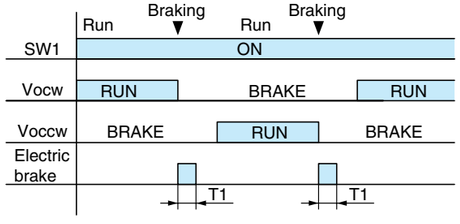

Motor	Single-phase 100 V Reversible motor
SSR	AQP107 (Matsushita Electric Works, Ltd.) or equivalent
R6	10 Ω

[Notes]

1. For information on R2, SW1, etc., not found in this figure, refer to the fundamental electrical diagram shown above.
2. For information on the SSR, refer to the related documents available from the contactless relay manufacturer.
3. The rated voltage of SSR should be 2 times or more the power supply voltage and the surge rating should be 100 A or more.
4. Be sure to use resistor R6 to protect SSR and capacitor.
   Current will flow through R6 - 2 A 90 W; 0.7 A 60 W; 1 A 40 W; 0.6 A 25 W; 0.4 A 15 W. Determine the wattage by first checking the heat dissipation.
5. Never turn on the motor while the electric braking is operating (T1).
6. Do not place Vocw and Voccw in RUN position at the same time.
7. For Vcc and R7, refer to "Unidirectional rotation and braking" above.

* Please read your User's manual carefully so that you will understand the operation and safety precautions before attempting to operate the system.

The thick continuous lines in the circuit diagram below represent main circuit. Use conductor of approx. 0.75 mm².
The thin continuous lines represent signal circuit. Use conductor of size approx. 0.3 mm².

• Contactless signal input driving

• These are internal equivalent circuits that may be used for contactless signal driving devices such as TTL and MOSIC.

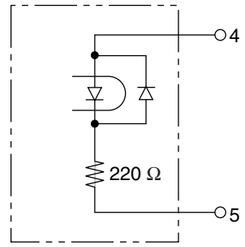

SD type

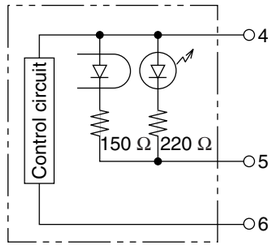

EX type

• Wattage of fixed resistor (R2)

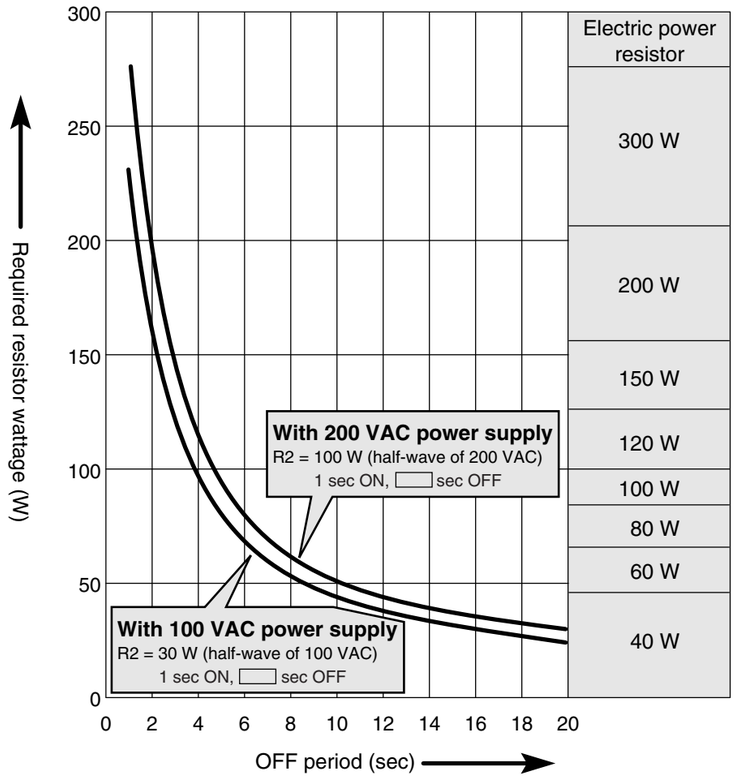

[Notes]

The curves shown above are required wattage of electric power resistor R2 to maintain the surface temperature of it at 200˚C or below when it is driven with WR (average on/off cycle power) and 35% load factor.
Load factor = 35% ON duration (braking time) = 1 sec (fixed)

1. When 100 VAC supply WR = 476/(Toff + 1)
2. When 200 VAC supply WR = 571/(Toff + 1)

Example: 10 sec run; 5 sec stop; 1 sec braking; under 100 VAC
WR = 476 / [(10 + 5 + 1) + 1] = 31.7 W

* Please read your User's manual carefully so that you will understand the operation and safety precautions before attempting to operate the system.